Engine Suspension
D4-225A-F, D4-260A-F, D4-300A-F

Miami Parts
Marine Engine Services

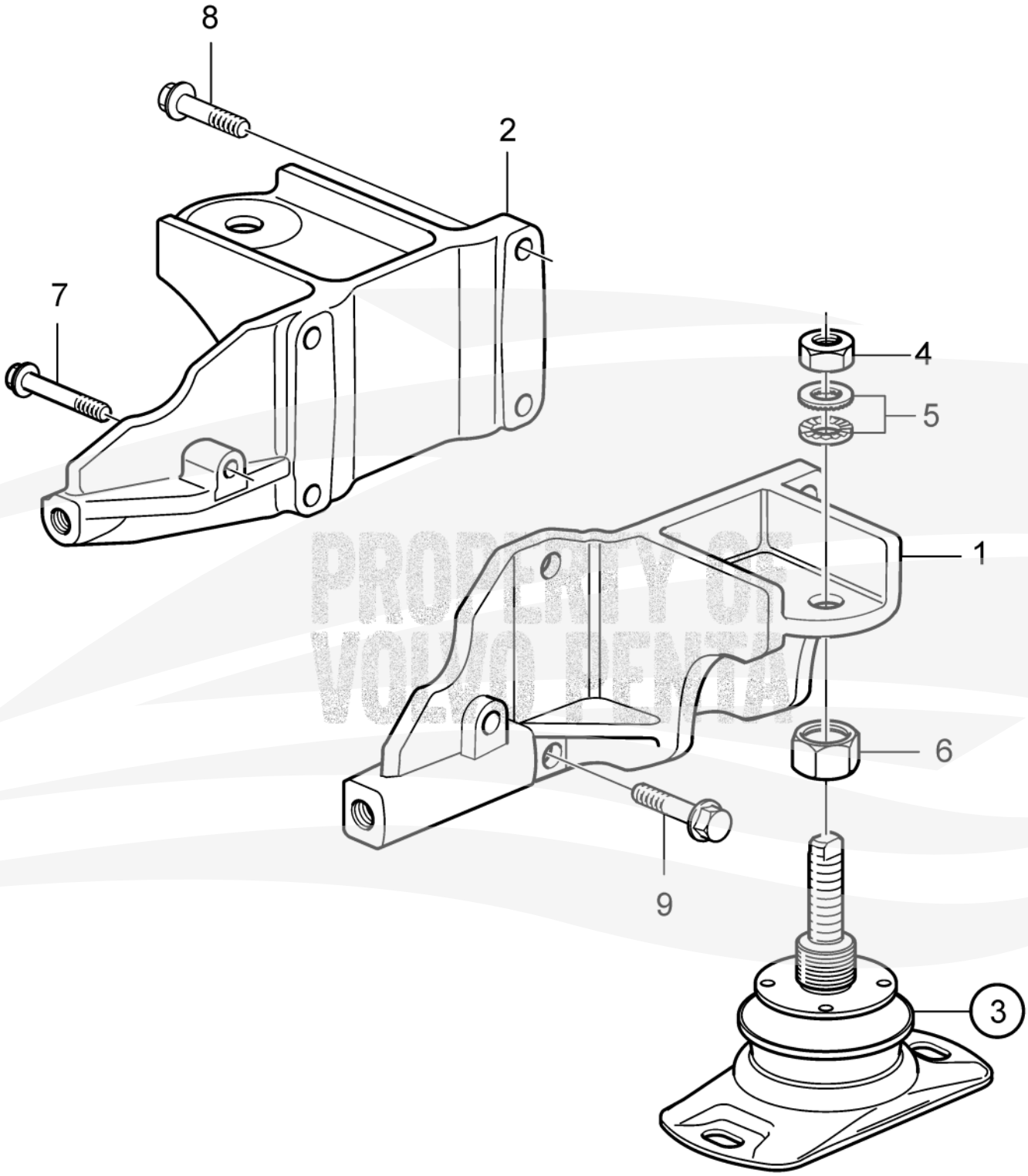

30151

PROPERTY OF VOLVO PENTA

VOLVO PENTA

Engine Suspension
D4-225A-F, D4-260A-F, D4-300A-F

Miami Parts
Marine Engine Services

REF	PART NO.	QTY	DESCRIPTION
1	21487639	1	Engine bracket
2	21487641	1	Engine bracket S.B, Front, Replaced by 23136596
2	23136596	2	Engine bracket S.B, Front
3	3595043	1	Rubber cushion
4	955786	1	Hexagon nut
5	847766	1	Lock washer
6	3594127	1	Nut
7	965188	8	Flange screw L=70mm
8	965183	1	Flange screw L=90mm
9	965186		Flange screw L=50mm